SALES DRAWING SALES DRAWING

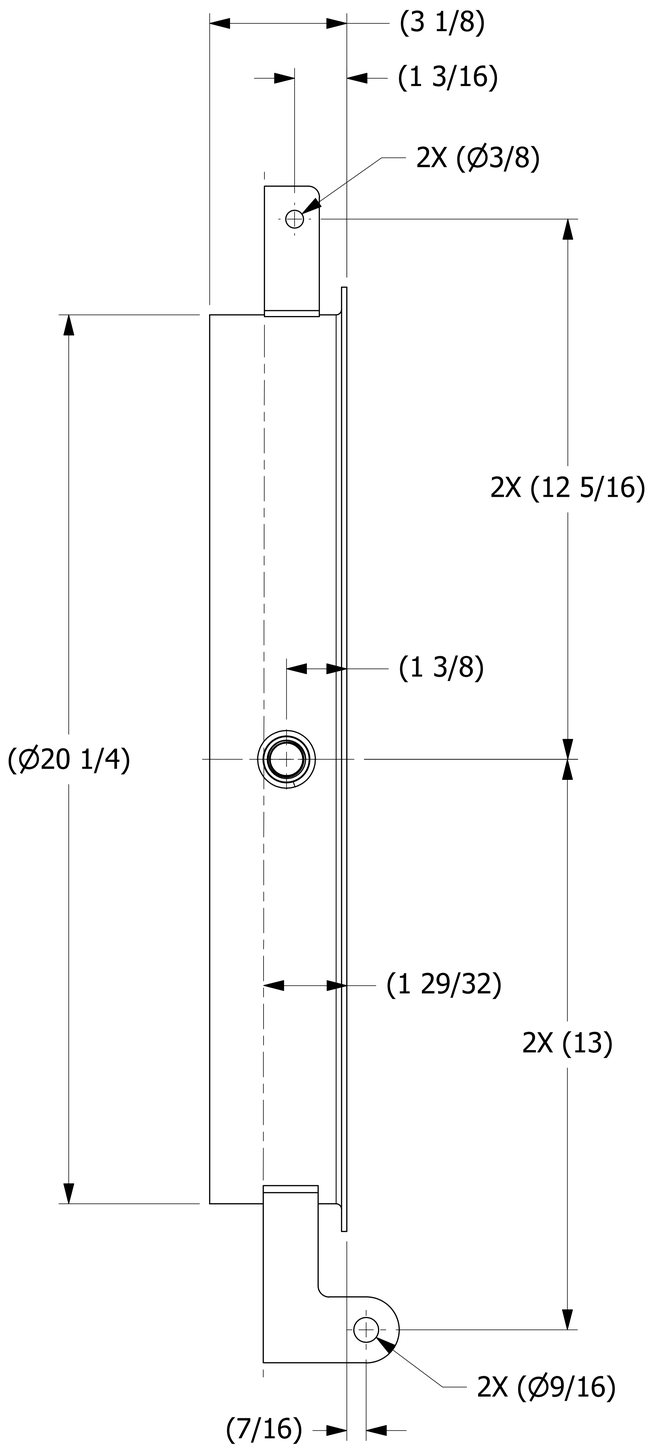

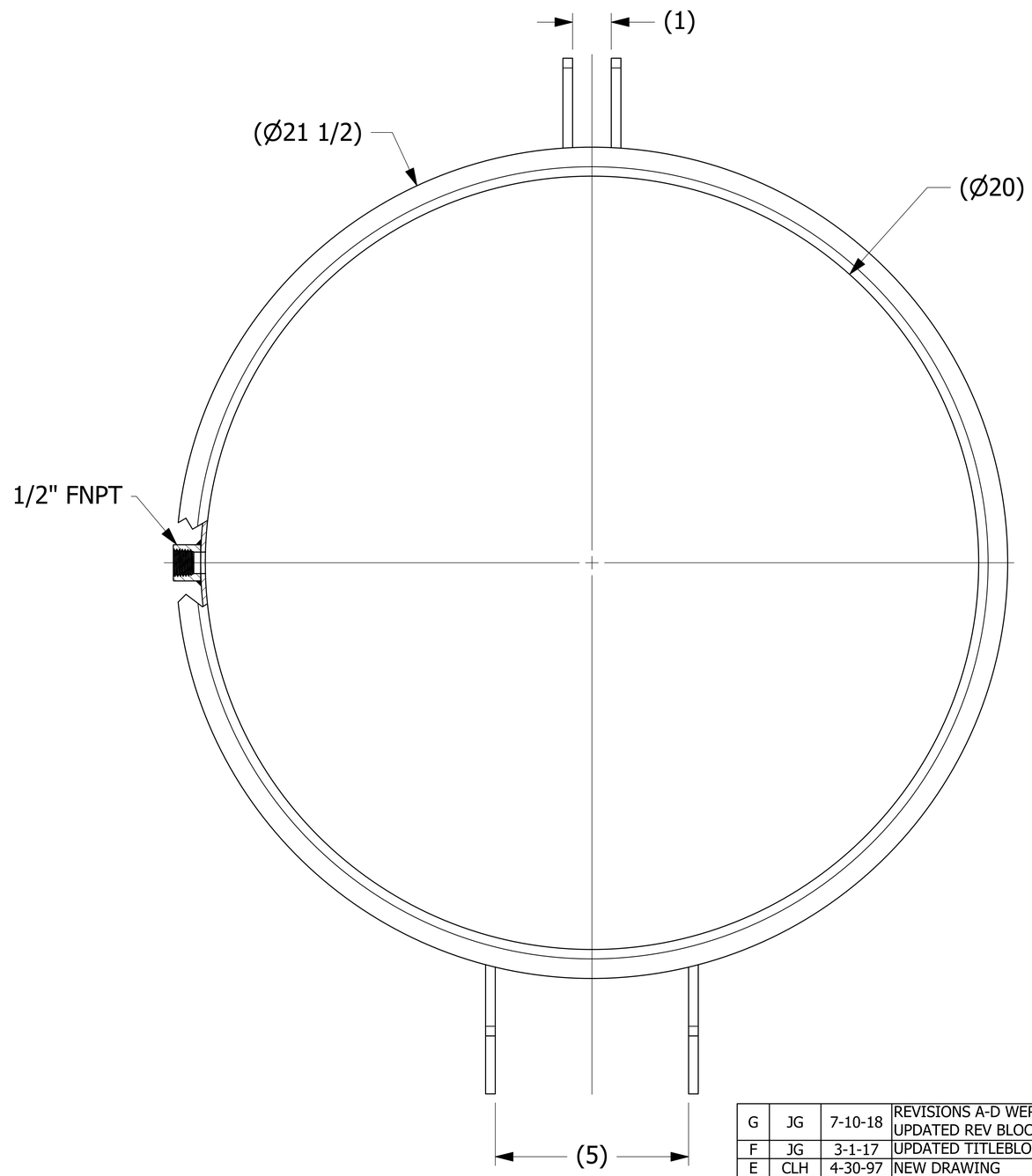

SALES DRAWING SALES DRAWING

REV	BY	DATE	DESCRIPTION
G	JG	7-10-18	REVISIONS A-D WERE MISSING ON DRAWING SINCE 4-30-97; UPDATED REV BLOCK, WELD NOTE TO DSS 12
F	JG	3-1-17	UPDATED TITLEBLOCK, NOTES, VIEWS, DIMS; ADDED BOM
E	CLH	4-30-97	NEW DRAWING
D	BRW	5-23-95	CHANGE MATERIAL
C	BJC	7-27-94	WELDING INSTRUCTIONS
B	BJC	7-26-94	11 GA STAINLESS MATERIAL
A	BJC	7-25-94	ADDED DIMENSIONS, UPDATED BRACKETS

UNLESS OTHERWISE SPECIFIED
DIMENSIONAL TOLERANCES
FRACTIONAL: ±1/16
X.XX: ±.03
X.XXX: ±.015
ANGULAR: ±1°
DEBURR ALL SHARP EDGES.
ALL MACHINED SURFACES TO HAVE A 125 RMS FINISH UNLESS NOTED OTHERWISE.
THIRD ANGLE PROJECTION

DRAWN BY:	CLH
CHECKED BY:	
PROTOTYPE BY:	CLH
PROTOTYPE DATE:	8/30/1996
APPROVED FOR PRODUCTION BY:	
PRODUCTION DATE:	8/30/1996

SALCO PRODUCTS, INC.

PART NAME: HATCH RING 20"

MATERIAL: 316 SS

PROJECT #: 970429 | SHEET #: 1 OF 1 | SCALE: 3:4

DRAWING #: E5660 | PART #: HCR20SS

THIS PRINT, PROPERTY OF SALCO PRODUCTS INC, CONTAINS PROPRIETARY INFORMATION AND MUST NOT BE COPIED, REPRODUCED, OR USED DETRIMENTALLY TO OUR INTEREST.