NO.	PART NAME	PART#	REQ'D	MATERIAL
1	EYEBOLT 7/8"X5"	EBR785HR	1	CARBON STEEL
2	FLAT WASHER 7/8"	WASH78T	1	CARBON STEEL
3	HEAVY HEX NUT 7/8"-9	N78X	1	CARBON STEEL
4	HUCK RIVET 1/4"X13/16"	A16204	1	304 SS
5	SAFETY COLLAR 1"	COLLAR1	1	CARBON STEEL

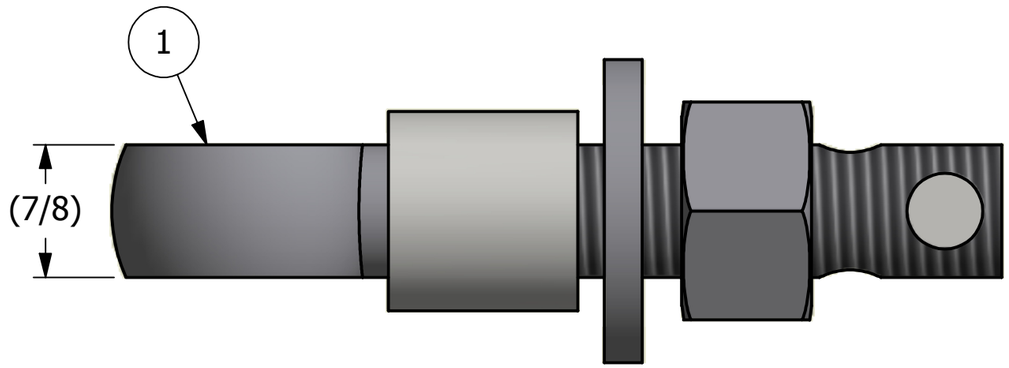

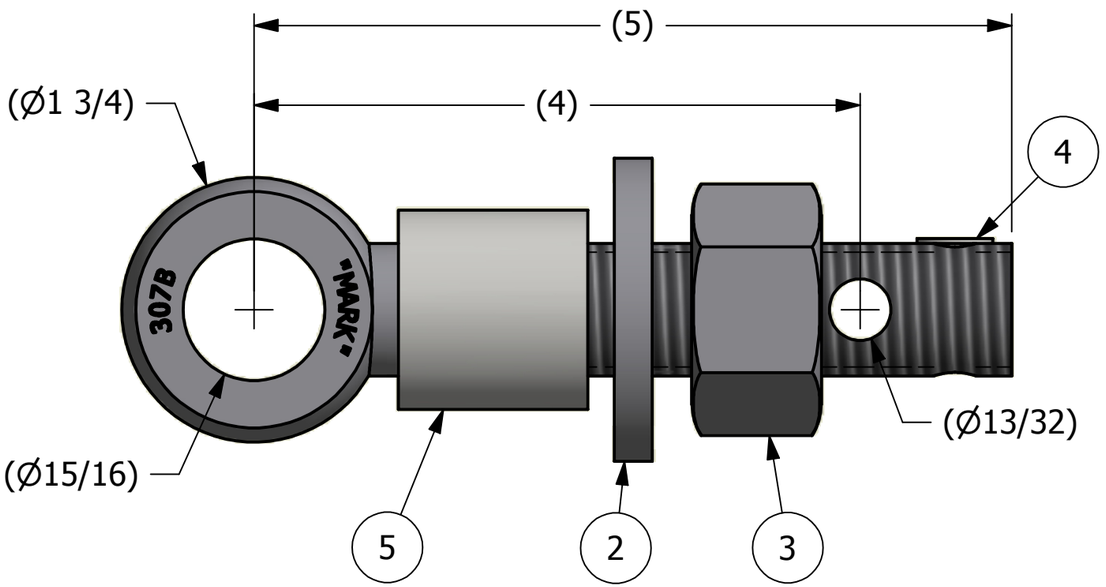

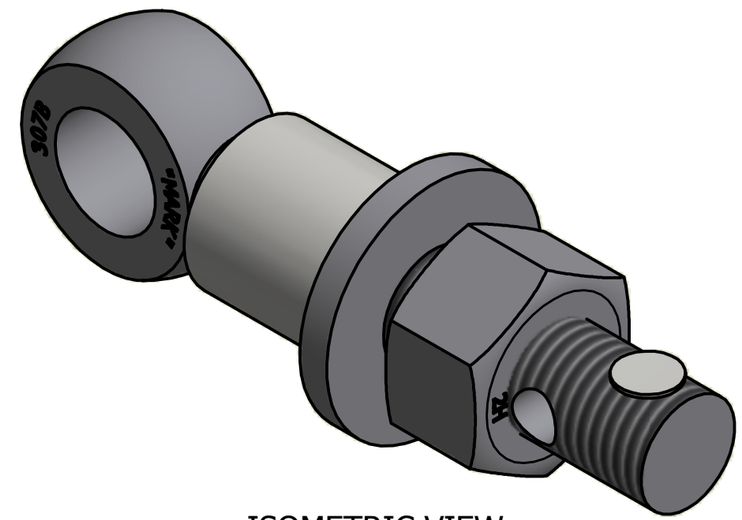

ISOMETRIC VIEW

REV	BY	DATE	DESCRIPTION
B	JJK	4-21-14	UPDATED EYEBOLT OD
A	CHL	9-17-10	NEW PART ADDED TO NETWORK

UNLESS OTHERWISE SPECIFIED DIMENSIONAL TOLERANCES

FRACTIONAL: ±1/16
X.XX: ±.03
X.XXX: ±.015
ANGULAR: ±1°

THIS PRINT, PROPRIETARY OF SALCO PRODUCTS INC., CONTAINS PROPRIETARY INFORMATION AND MUST NOT BE COPIED, REPRODUCED, OR USED DETRIMENTALLY TO OUR INTEREST.

THIRD ANGLE PROJECTION

DRAWN BY:	VD
CHECKED BY:	CHL
PROTOTYPE BY:	VD
PROTOTYPE DATE:	1/11/2010
APPROVED FOR PRODUCTION BY:	CHL
PRODUCTION DATE:	9/17/2010

SALCO PRODUCTS, INC.

PART NAME: EYEBOLT ASSEMBLY 7/8"X5"

MATERIAL: SEE BOM

PROJECT #: WAG0759 | SHEET #: 1 OF 1 | SCALE: 1:1

DRAWING #: B27958 | PART #: EB785XHA2C