NO	PART NAME	PART#	REQ'D	MATERIAL
1	ID PLATE 3" X 3/4"	A15152	.5	ALUMINUM
2	DRIVE SCREW TYPE U #2 X 1/8"	DR218	2	18-8 SS
3	SURGE PROTECTOR	DSP3313SS6	1	316L SS
4	QUICK INSPECT FLANGE GASKET	FG550N	1	WHITE FDA NITRILE
5	QUICK INSPECT SAFETY VENT	QI261BSA	1	BLACK NORYL
6	QI RETAINER GASKET	QI261G2	1	WHITE FDA NITRILE
7	QI RUPTURE DISK GASKET	QI261RDG2	1	WHITE FDA NITRILE
8	RUPTURE DISC (SOLD SEPARATELY)			

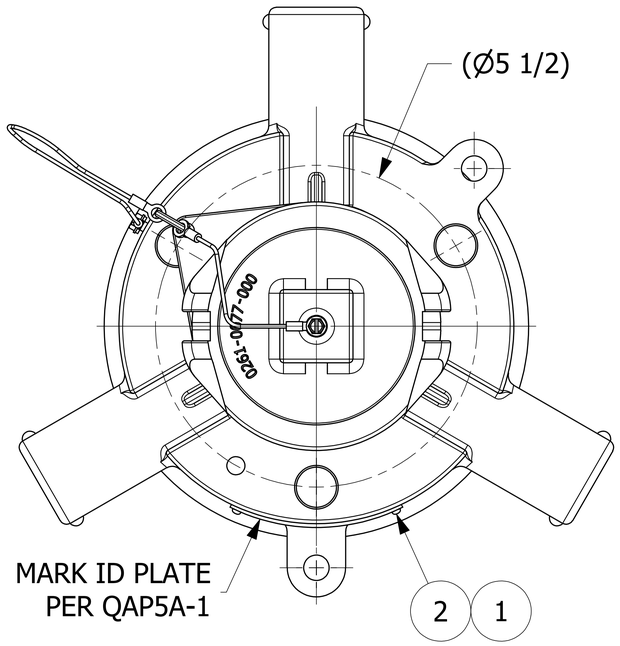

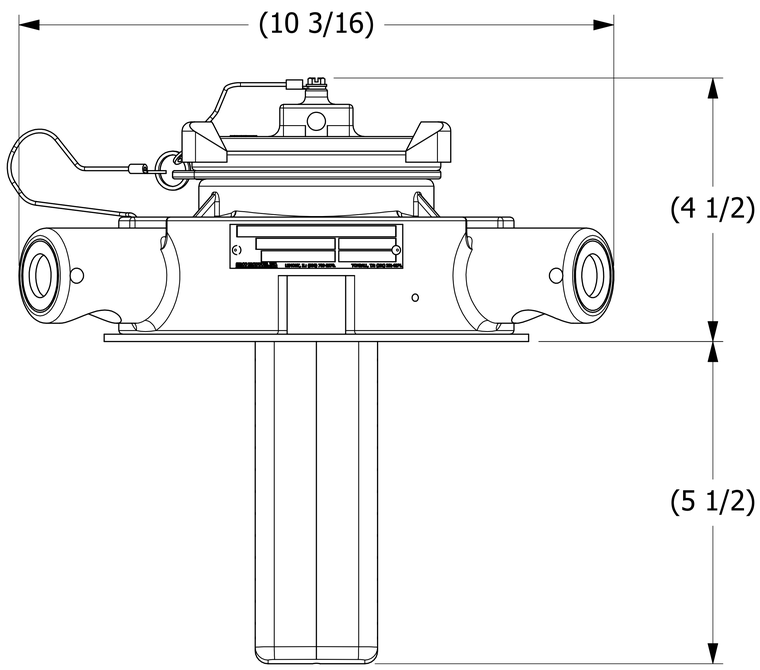

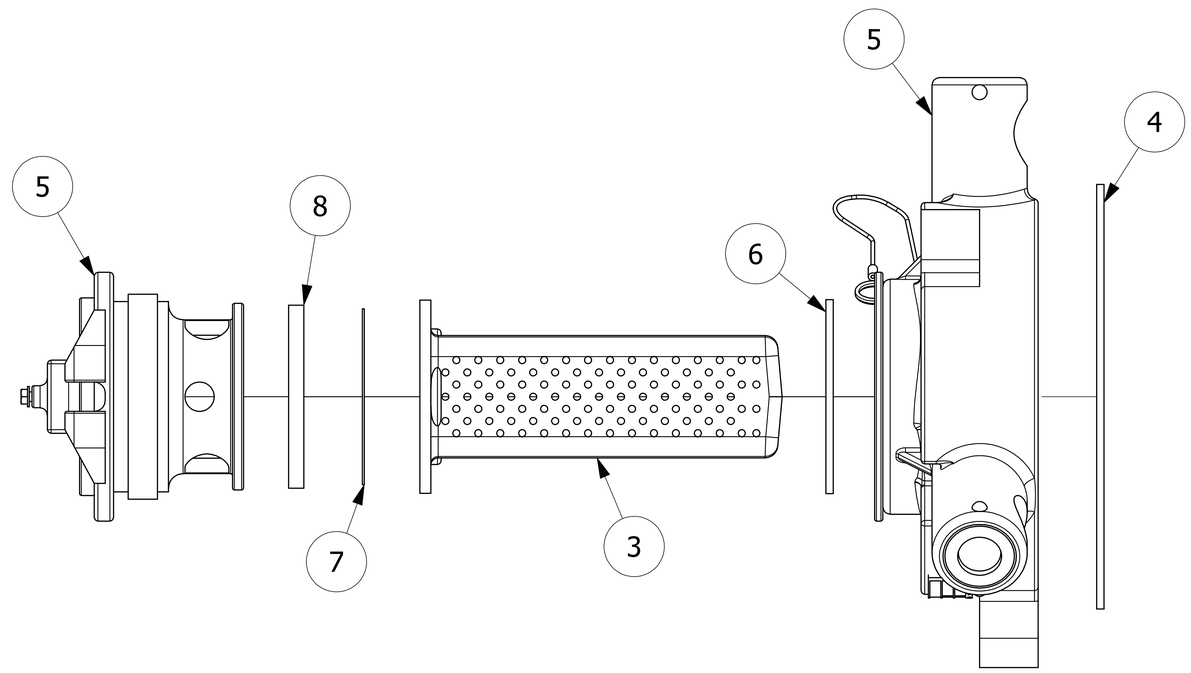

NOTES:
1. CUSTOMERS RESPONSIBILITY FOR COMPATIBILITY OF COMMODITY.
2. AAR APPROVAL # PRD-162102.
3. SEE DOCUMENT QAP5A-1 FOR MARKING PROCEDURE.
4. FASTEN ID PLATE WITH DRIVE SCREWS.

REV	BY	DATE	DESCRIPTION
C	JG	2-7-17	AAR APPROVAL # WAS SRD-063000
B	TAK	8-26-13	ADDED A15152, DR218 & QAP5A-1 NOTE
A	CHL	8-20-09	NEW PART ADDED TO SYSTEM

UNLESS OTHERWISE SPECIFIED DIMENSIONAL TOLERANCES
FRACTIONAL: ±1/16
X.XX: ±.03
X.XXX: ±.015
ANGULAR: ±1°
DEBURR ALL SHARP EDGES. ALL MACHINED SURFACES TO HAVE A 125 RMS FINISH UNLESS NOTED OTHERWISE.
THIRD ANGLE PROJECTION

DRAWN BY:	CHL
CHECKED BY:	VD
PROTOTYPE BY:	CHL
PROTOTYPE DATE:	7/14/2009
APPROVED FOR PRODUCTION BY:	WRB
PRODUCTION DATE:	8/20/2009

SALCO PRODUCTS, INC.

PART NAME: QUICK INSPECT SAFETY VENT

MATERIAL: SEE BOM

PROJECT #: WAG0712 | SHEET #: 1 OF 1 | SCALE: 1:1

DRAWING #: E27179 | PART #: QI2612SSA

THIS PRINT, PROPERTY OF SALCO PRODUCTS INC, CONTAINS PROPRIETARY INFORMATION AND MUST NOT BE COPIED, REPRODUCED, OR USED DETRIMENTALLY TO OUR INTEREST.