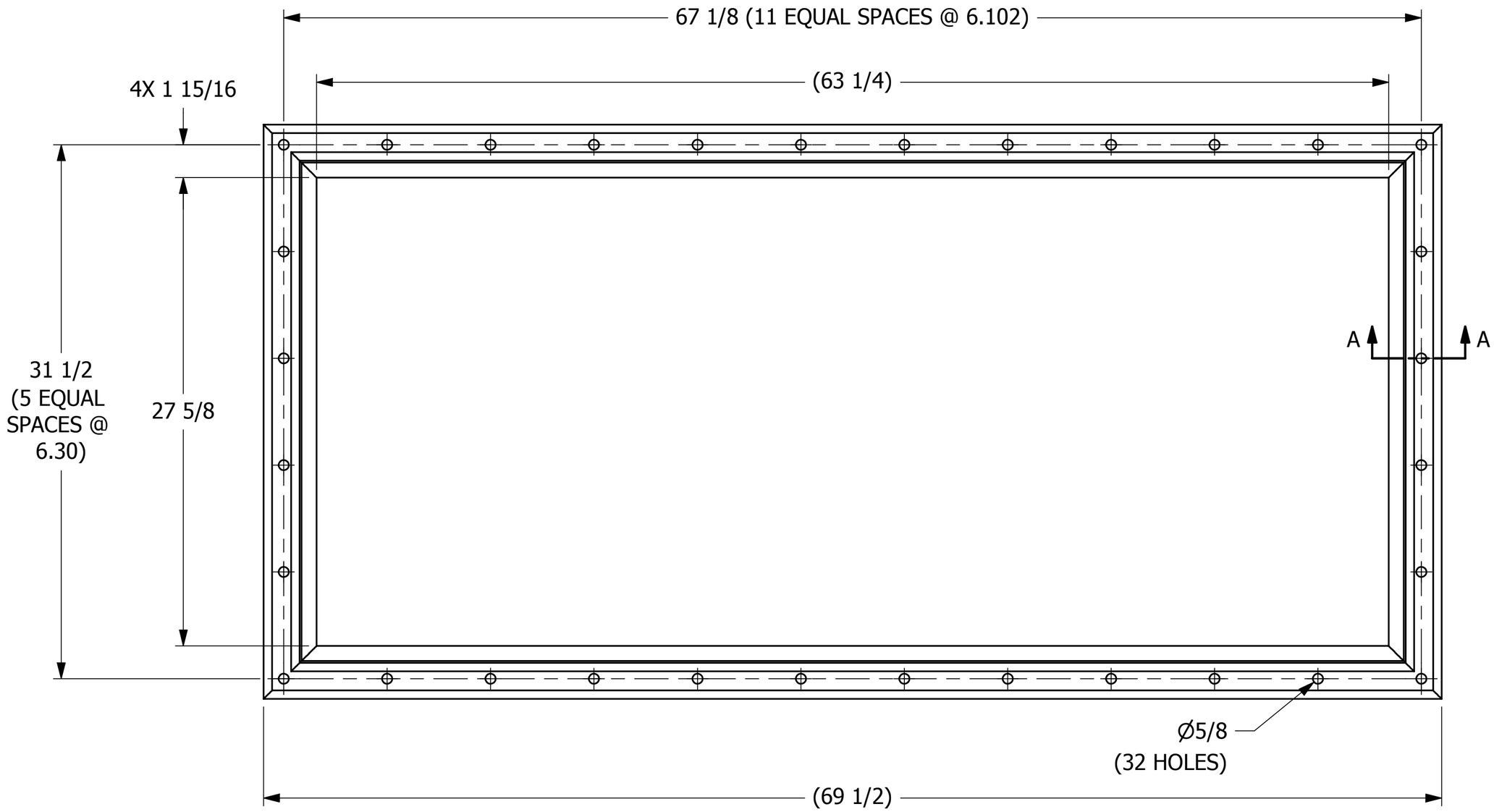

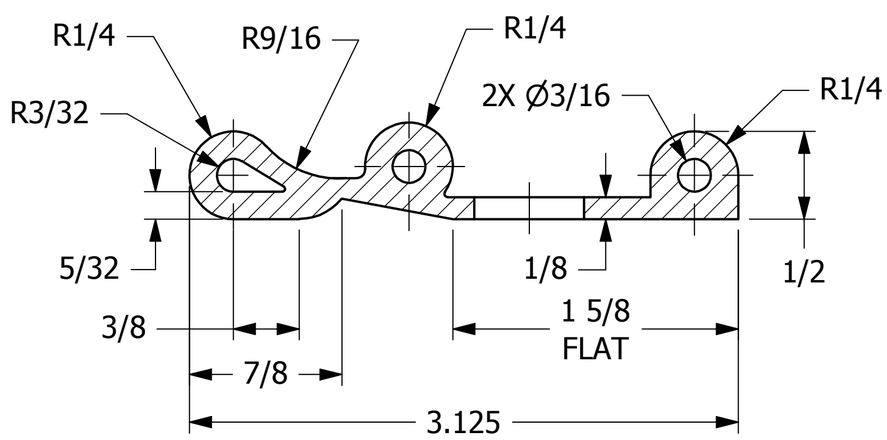

SECTION A-A
SCALE 3:2

NOTE:
GASKET DUROMETER 60±5.

REV	BY	DATE	DESCRIPTION
A	REH	8-3-10	ADDED DUROMETER NOTE

UNLESS OTHERWISE SPECIFIED DIMENSIONAL TOLERANCES
FRACTIONAL: ±1/16
X.XX: ±.03
X.XXX: ±.015
ANGLE: ±1°
DEBURR ALL SHARP EDGES. ALL MACHINED SURFACES TO HAVE A 125 RMS FINISH UNLESS NOTED OTHERWISE.
THIRD ANGLE PROJECTION

DRAWN BY:	JDA
CHECKED BY:	
PROTOTYPE BY:	JDA
PROTOTYPE DATE:	11/2/1992
APPROVED FOR PRODUCTION BY:	JDA
PRODUCTION DATE:	11/2/1998

SALCO PRODUCTS, INC.

PART NAME: ACF TYPE BOTTOM OUTLET PAN GASKET

MATERIAL: WHITE VINYL DURO 60±5.

PROJECT #:

SHEET #: 1 OF 1

SCALE: 1:5

DRAWING #: C5302

PART #: TBG111

THIS PRINT, PROPERTY OF SALCO PRODUCTS INC, CONTAINS PROPRIETARY INFORMATION AND MUST NOT BE COPIED, REPRODUCED, OR USED DETRIMENTALLY TO OUR INTEREST.