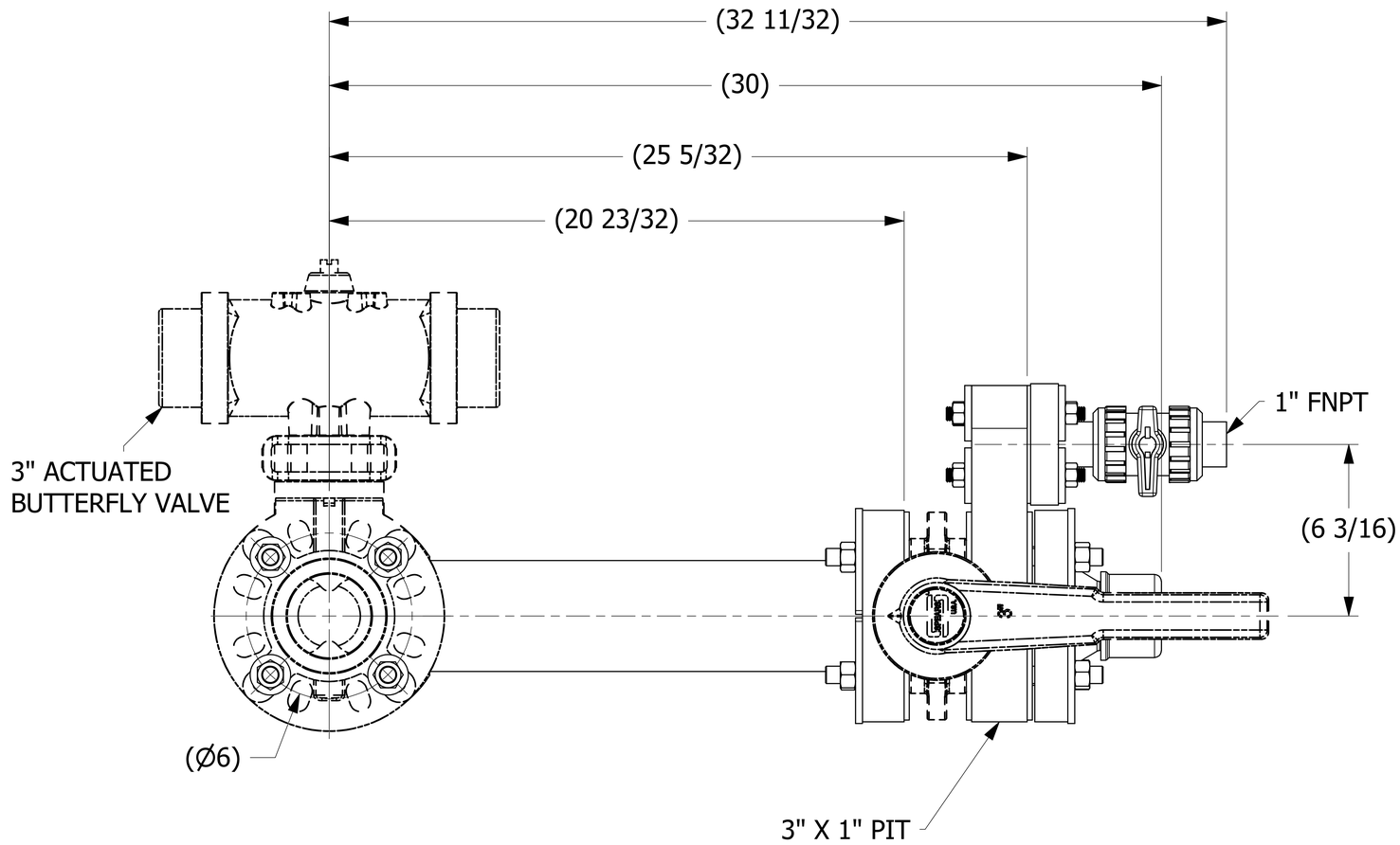

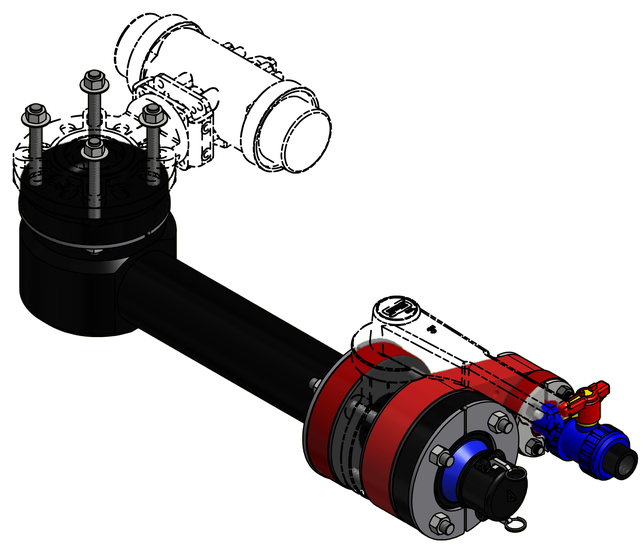

ISOMETRIC VIEW

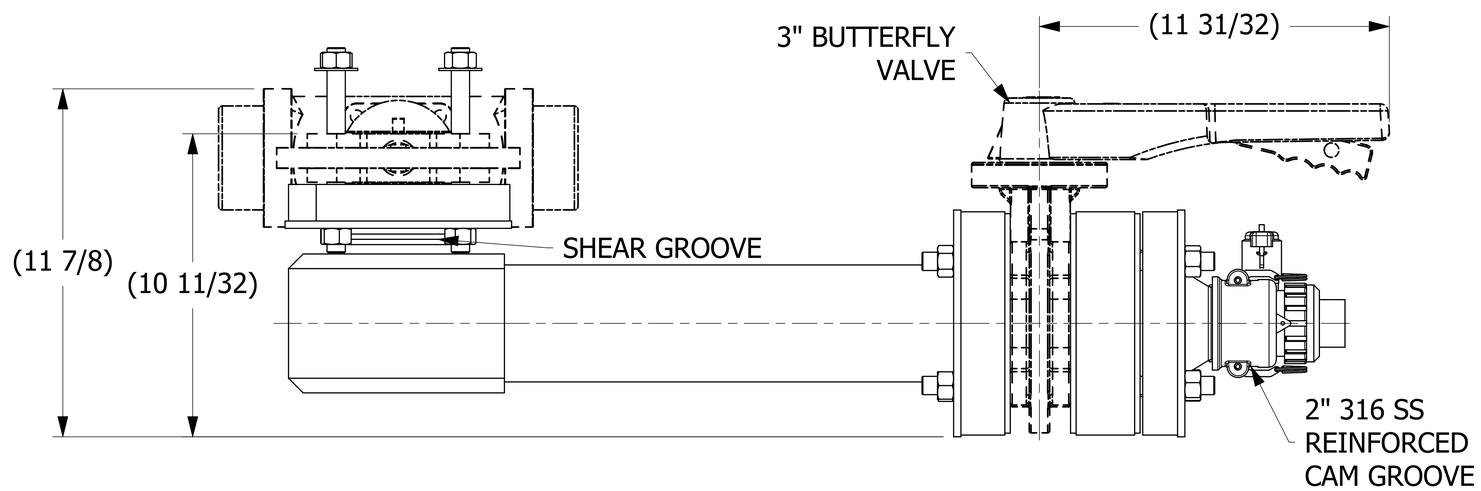

NOTE:
1. FLANGE GASKET MATERIAL IS PEROXIDE CURED BLACK EPDM.
2. CAP GASKET MATERIAL IS BLACK EPDM.
3. BUTTERFLY VALVE TO BE PURCHASED SEPARATELY.

REV	BY	DATE	DESCRIPTION
A	JG	3-9-16	RELEASED FOR PRODUCTION

UNLESS OTHERWISE SPECIFIED DIMENSIONAL TOLERANCES
FRACTIONAL: ±1/16
X.XX: ±.03
X.XXX: ±.015
ANGULAR: ±1°
DEBURR ALL SHARP EDGES. ALL MACHINED SURFACES TO HAVE A 125 RMS FINISH UNLESS NOTED OTHERWISE.
THIRD ANGLE PROJECTION

DRAWN BY:	JG
CHECKED BY:	JRO
PROTOTYPE BY:	JG
PROTOTYPE DATE:	2/29/2016
APPROVED FOR PRODUCTION BY:	JRO
PRODUCTION DATE:	3/9/2016

SALCO PRODUCTS, INC.

PART NAME: UNLOADING ASSEMBLY 3"X2"

MATERIAL: SALCO PE/SS

PROJECT #: H160229 | SHEET #: 1 OF 1 | SCALE: 1:2

DRAWING #: E43330 | PART #: HSTTU43330

THIS PRINT, PROPERTY OF SALCO PRODUCTS INC, CONTAINS PROPRIETARY INFORMATION AND MUST NOT BE COPIED, REPRODUCED, OR USED DETRIMENTALLY TO OUR INTEREST.

SALES DRAWING SALES DRAWING
SALES DRAWING SALES DRAWING