SALES DRAWING SALES DRAWING

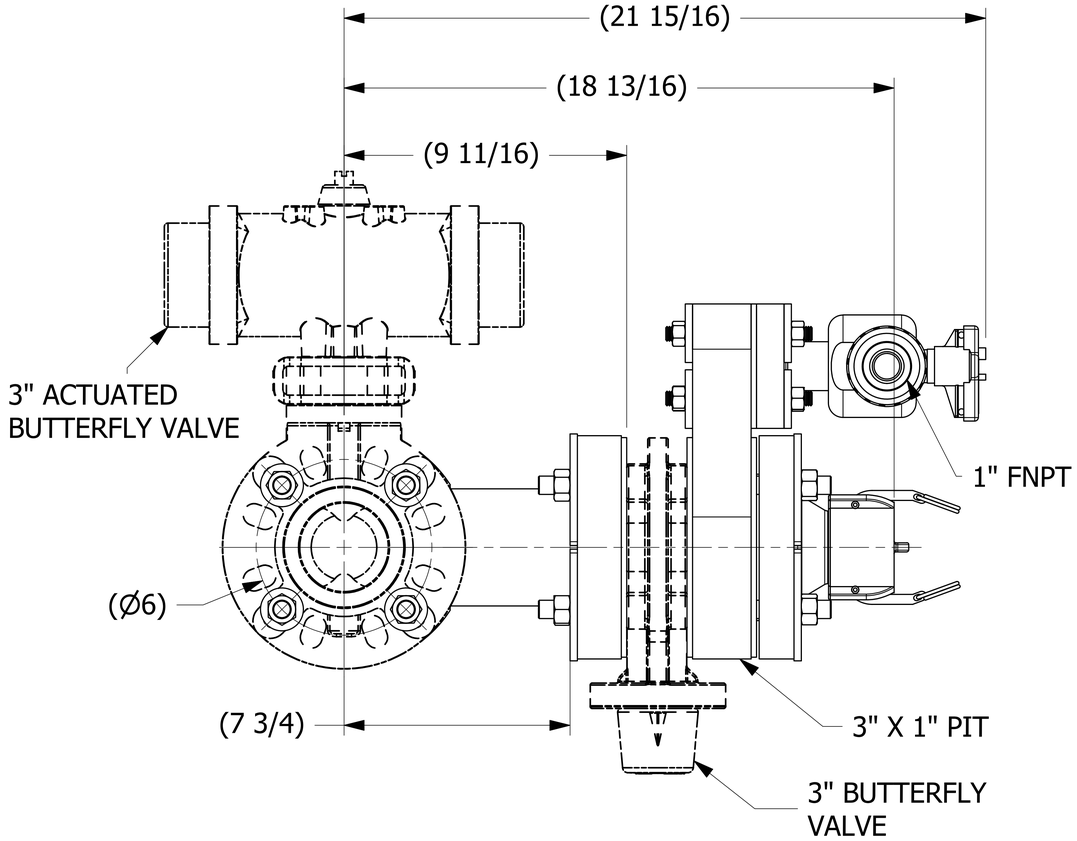

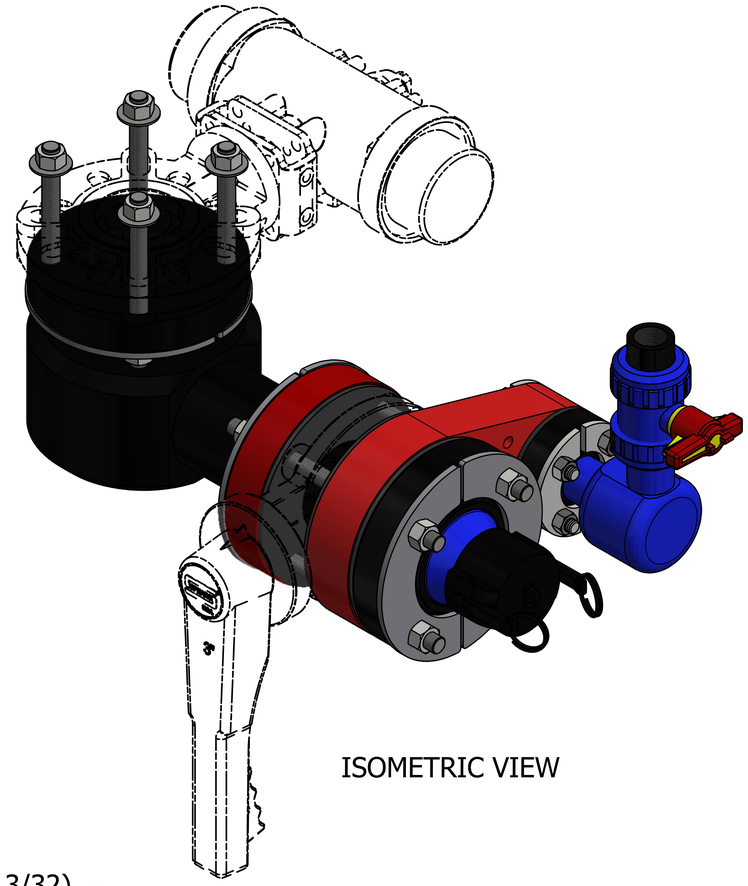

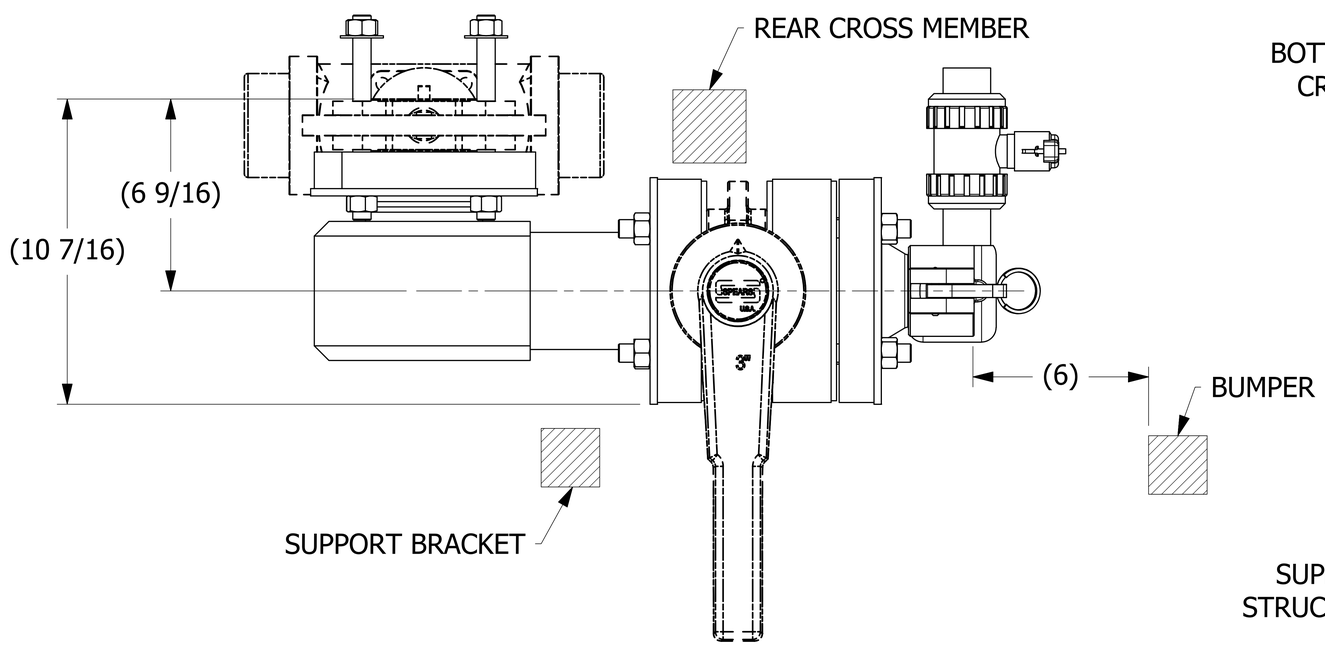

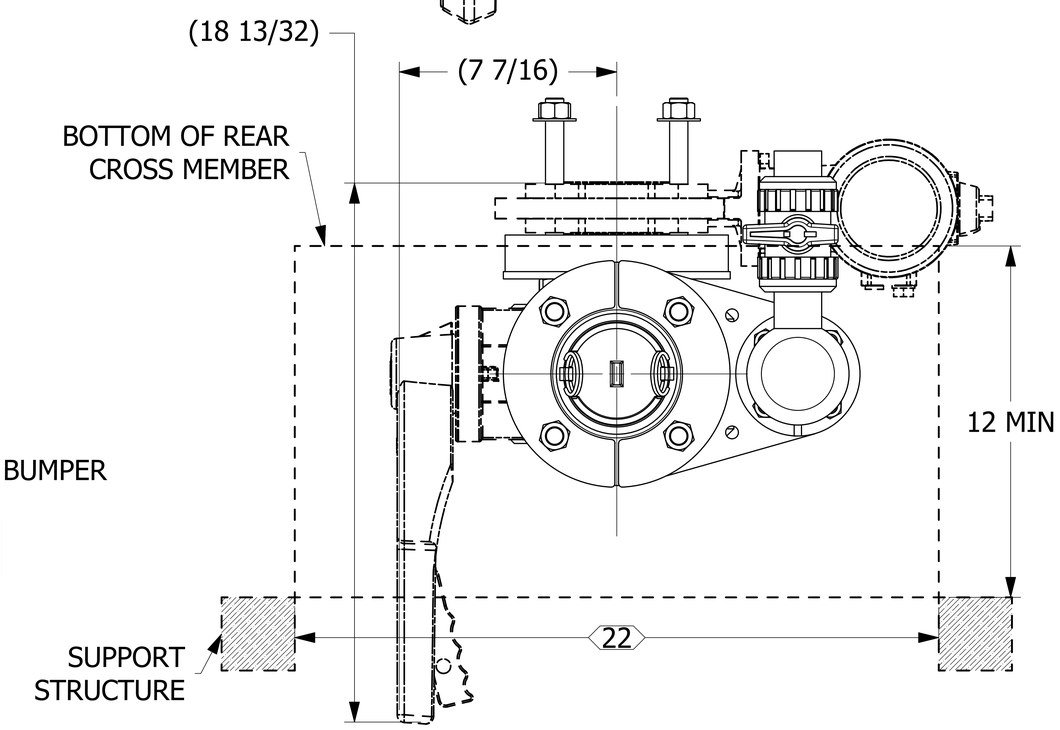

SALES DRAWING SALES DRAWING

NOTE:
1. FLANGE GASKET MATERIAL IS VITON® A.
2. CAP GASKET MATERIAL IS VITON® A.
3. BUTTERFLY VALVES TO BE PURCHASED SEPARATELY.

REV	BY	DATE	DESCRIPTION
A	TAK	8-22-18	RELEASED FOR PRODUCTION

UNLESS OTHERWISE SPECIFIED DIMENSIONAL TOLERANCES
FRACTIONAL: ±1/16
X.XX: ±.03
X.XXX: ±.015
ANGULAR: ±1°
DEBURR ALL SHARP EDGES. ALL MACHINED SURFACES TO HAVE A 125 RMS FINISH UNLESS NOTED OTHERWISE.
THIRD ANGLE PROJECTION

DRAWN BY:	TAK
CHECKED BY:	EJF
PROTOTYPE BY:	TAK
PROTOTYPE DATE:	8/1/2018
APPROVED FOR PRODUCTION BY:	TAK
PRODUCTION DATE:	8/22/2018

SALCO PRODUCTS, INC.

PART NAME: UNLOADING ASSEMBLY 3"X2"

MATERIAL: SALCO PE/SS

PROJECT #: H180731 | SHEET #: 1 OF 1 | SCALE: 1:2

DRAWING #: E47562 | PART #: HSTTU47562

THIS PRINT, PROPERTY OF SALCO PRODUCTS INC, CONTAINS PROPRIETARY INFORMATION AND MUST NOT BE COPIED, REPRODUCED, OR USED DETRIMENTALLY TO OUR INTEREST.