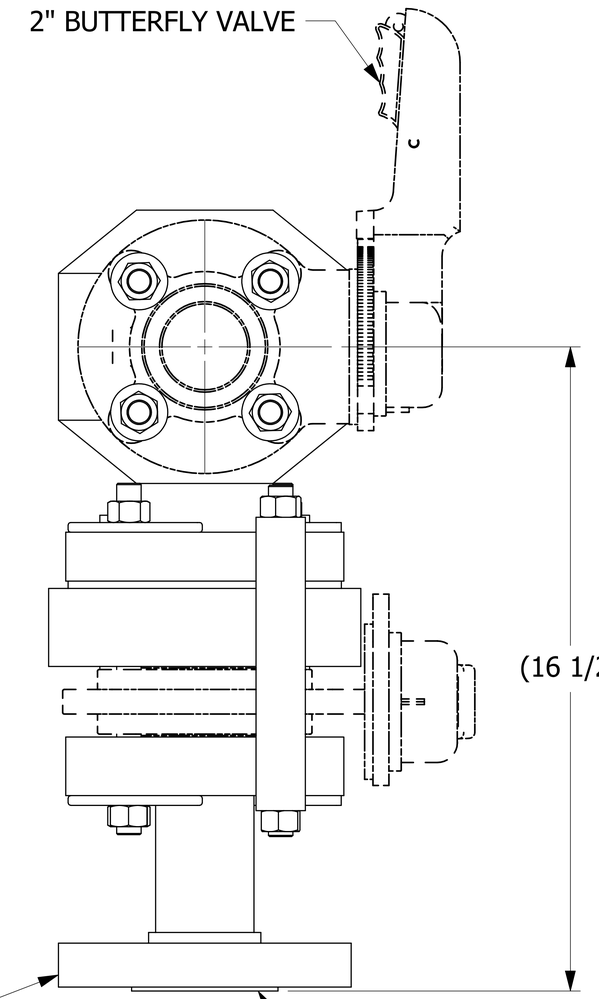


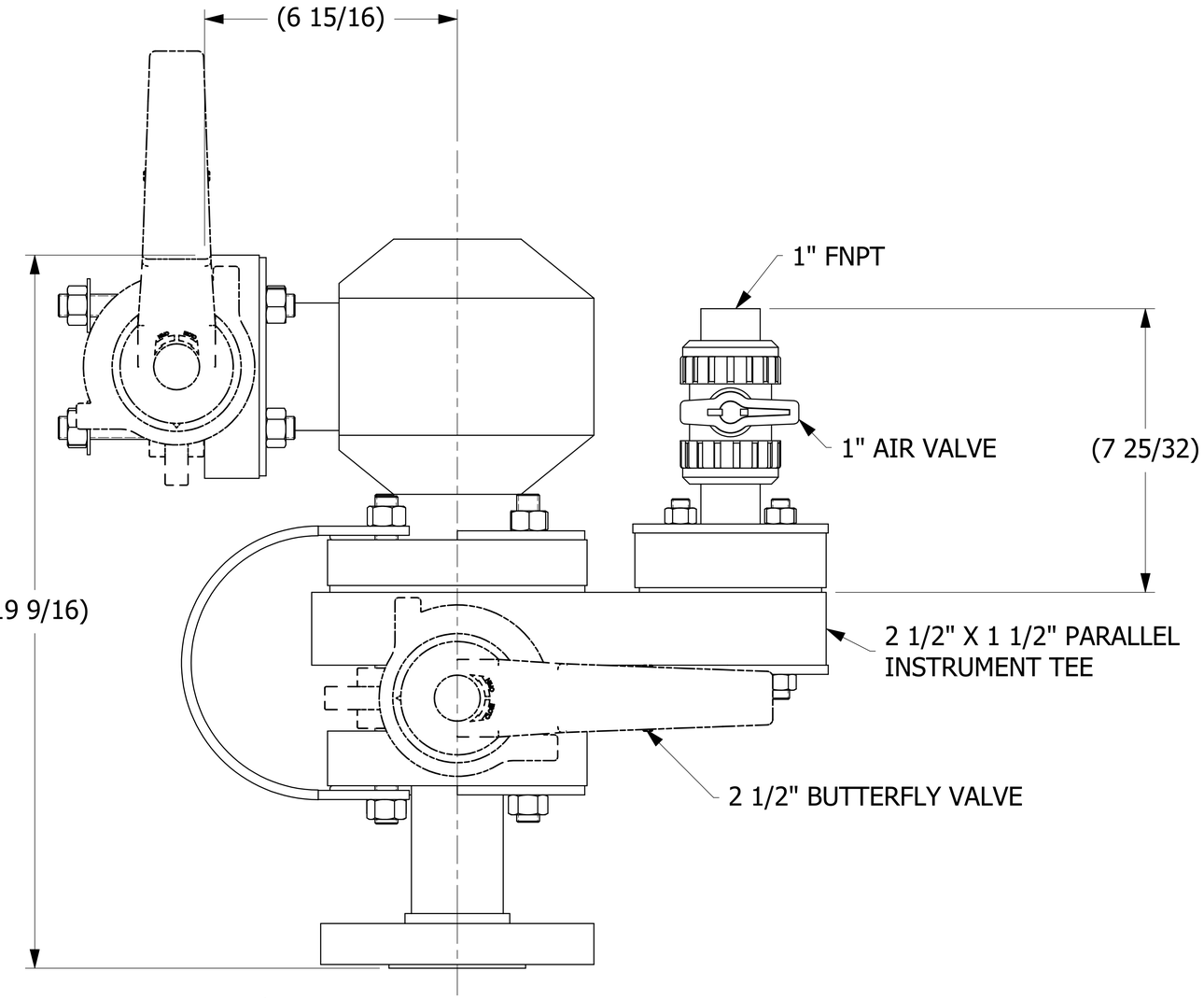


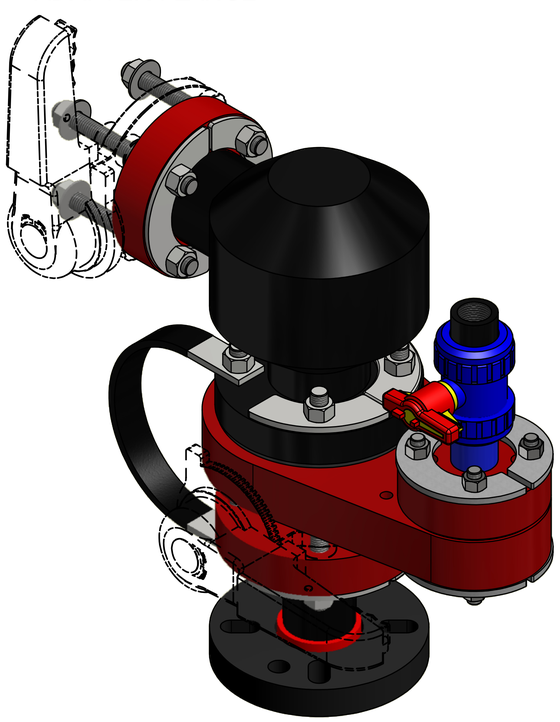

ISOMETRIC VIEW

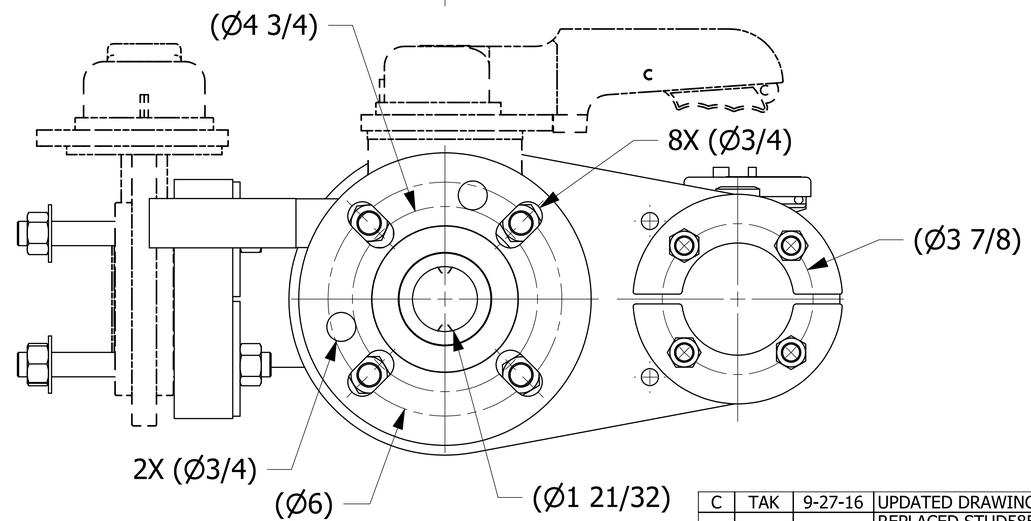


NOTES:
1. GASKET MATERIAL IS PEROXIDE CURED BLACK EPDM.
2. APPROXIMATE WEIGHT IS 40 LBS.
3. BUTTERFLY VALVE IS SOLD SEPARATELY.

| REV | BY | DATE | DESCRIPTION |
|---|---|---|---|
| C | TAK | 9-27-16 | UPDATED DRAWING NUMBER FROM E41285 TO E42560 |
| B | TAK | 2-11-16 | REPLACED STUD585SS W/STUD58612SS, ADDED BUTTERFLY VALVE, REMOVED FG2215029 |
| A | TAK | 10-29-15 | RELEASED FOR PRODUCTION |

UNLESS OTHERWISE SPECIFIED DIMENSIONAL TOLERANCES
FRACTIONAL: ±1/16
X.XX: ±.03
X.XXX: ±.015
ANGULAR: ±1°
DEBURR ALL SHARP EDGES. ALL MACHINED SURFACES TO HAVE A 125 RMS FINISH UNLESS NOTED OTHERWISE.
THIRD ANGLE PROJECTION

| | |
|---|---|
| DRAWN BY: | JG |
| CHECKED BY: | JRO |
| PROTOTYPE BY: | JG |
| PROTOTYPE DATE: | 10/21/2015 |
| APPROVED FOR PRODUCTION BY: | TAK |
| PRODUCTION DATE: | 10/29/2015 |

SALCO PRODUCTS, INC.

PART NAME: VALVE ASSEMBLY 2 1/2"X2"

MATERIAL: SALCO PE/SS

PROJECT #: H150908F2 | SHEET #: 1 OF 1 | SCALE: 3:4

DRAWING #: E42560 | PART #: HSCSLSHMULA13

THIS PRINT, PROPERTY OF SALCO PRODUCTS INC, CONTAINS PROPRIETARY INFORMATION AND MUST NOT BE COPIED, REPRODUCED, OR USED DETRIMENTALLY TO OUR INTEREST.

SALES DRAWING SALES DRAWING
SALES DRAWING SALES DRAWING