SALES DRAWING SALES DRAWING

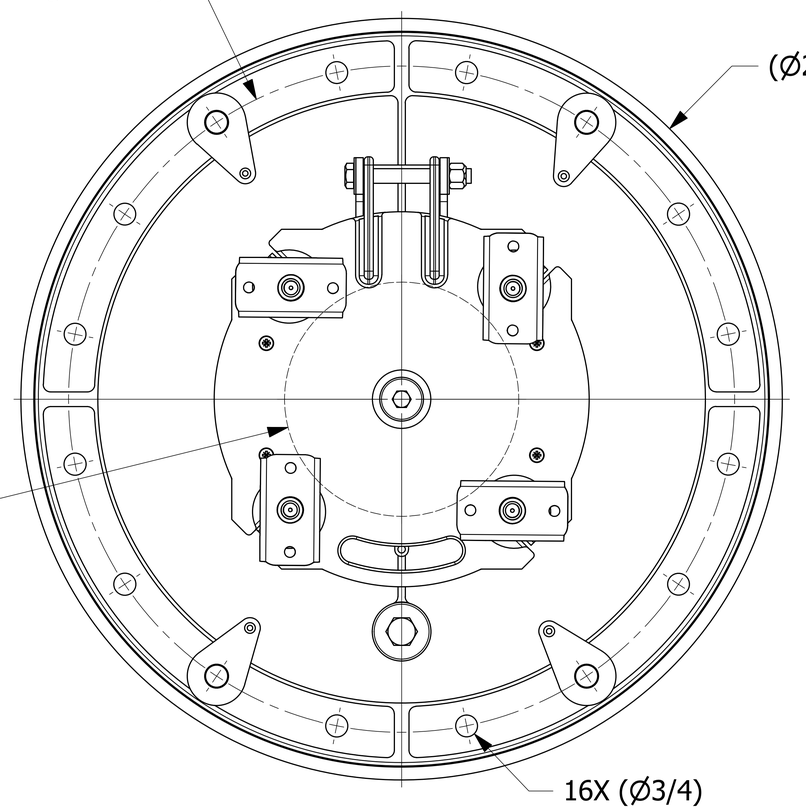

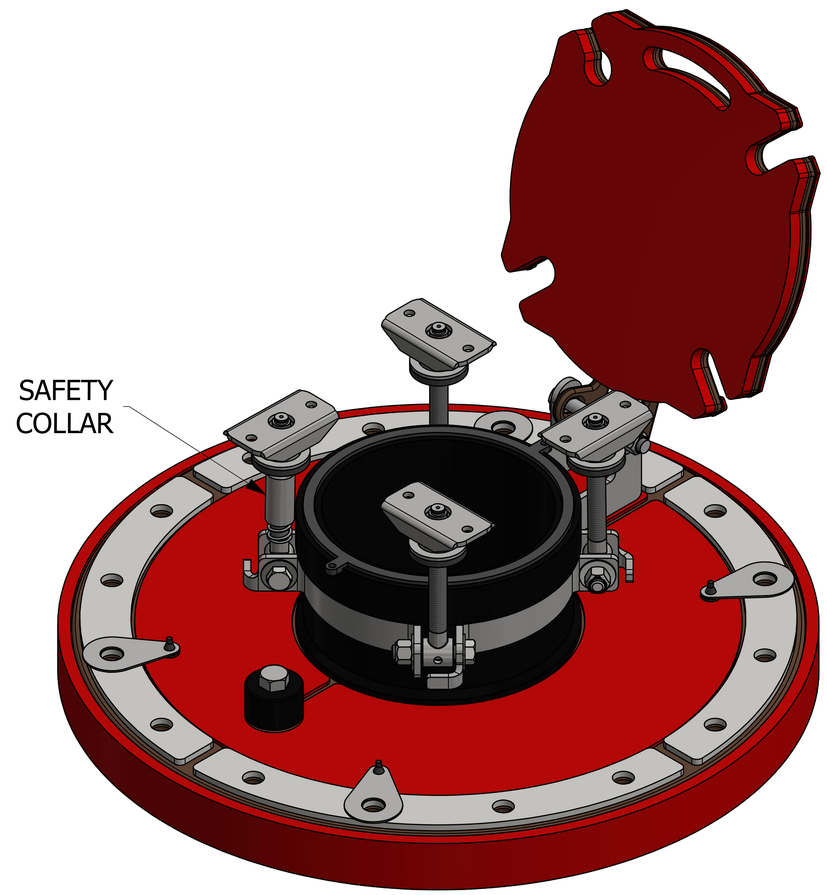

ISOMETRIC VIEW

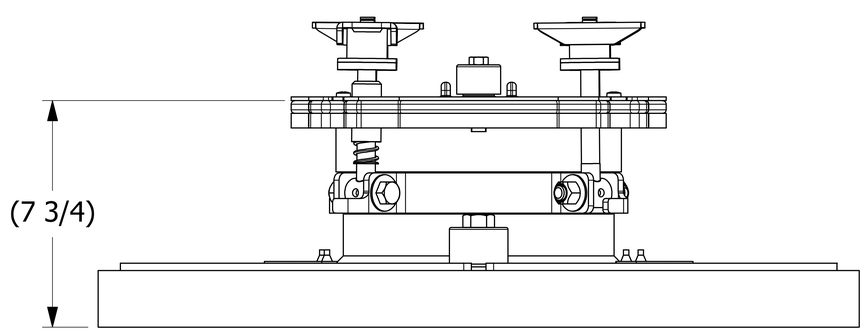

NOTES:
1. ALL FASTENERS TO BE HAND TIGHTENED ONLY. DO NOT USE ANY TOOLS.
2. SEALS FROM TTG0129A AND SEGMENTED WASHERS TO BE SHIPPED LOOSE.
3. SHIP INSTALLATION INSTRUCTIONS WITH PLATE.
4. GASKET MATERIAL IS BLACK EPDM PEROXIDE CURED.

REV	BY	DATE	DESCRIPTION
A	JG	10-9-18	RELEASED FOR PRODUCTION

UNLESS OTHERWISE SPECIFIED DIMENSIONAL TOLERANCES
FRACTIONAL: ±1/16
X.XX: ±.03
X.XXX: ±.015
ANGULAR: ±1°
DEBURR ALL SHARP EDGES.
ALL MACHINED SURFACES TO HAVE A 125 RMS FINISH UNLESS NOTED OTHERWISE.
THIRD ANGLE PROJECTION

DRAWN BY:	JG
CHECKED BY:	EJF
PROTOTYPE BY:	JG
PROTOTYPE DATE:	8/27/2018
APPROVED FOR PRODUCTION BY:	EJF
PRODUCTION DATE:	10/9/2018

SALCO PRODUCTS, INC.

PART NAME: TRUCK MANWAY ASSEMBLY 18"

MATERIAL: SALCO PE/CS/SS/EPDM

PROJECT #: H180817 | SHEET #: 1 OF 1 | SCALE: 1:1

DRAWING #: E47725 | PART #: HSFPTT1801DFUHA02

THIS PRINT, PROPERTY OF SALCO PRODUCTS INC, CONTAINS PROPRIETARY INFORMATION AND MUST NOT BE COPIED, REPRODUCED, OR USED DETRIMENTALLY TO OUR INTEREST.

SALES DRAWING SALES DRAWING